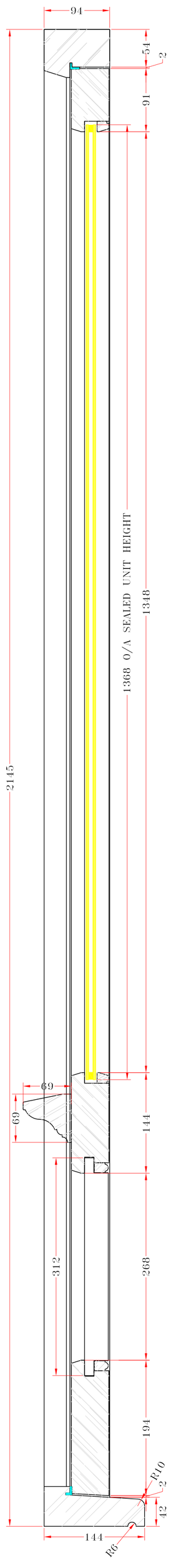

1:4 HEIGHT SECTION

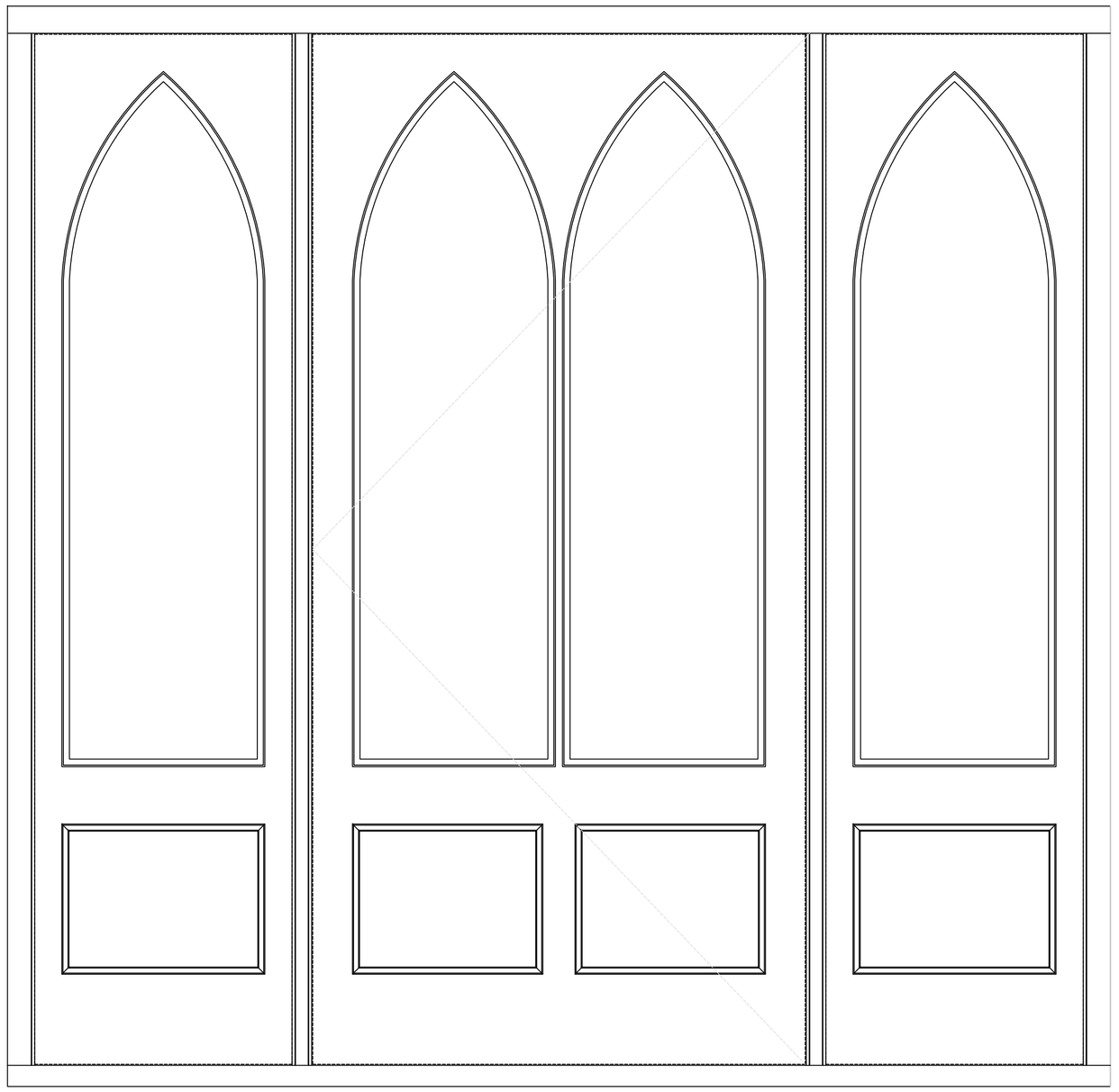

1:8 ELEVATION – EXTERNALLY VIEWED

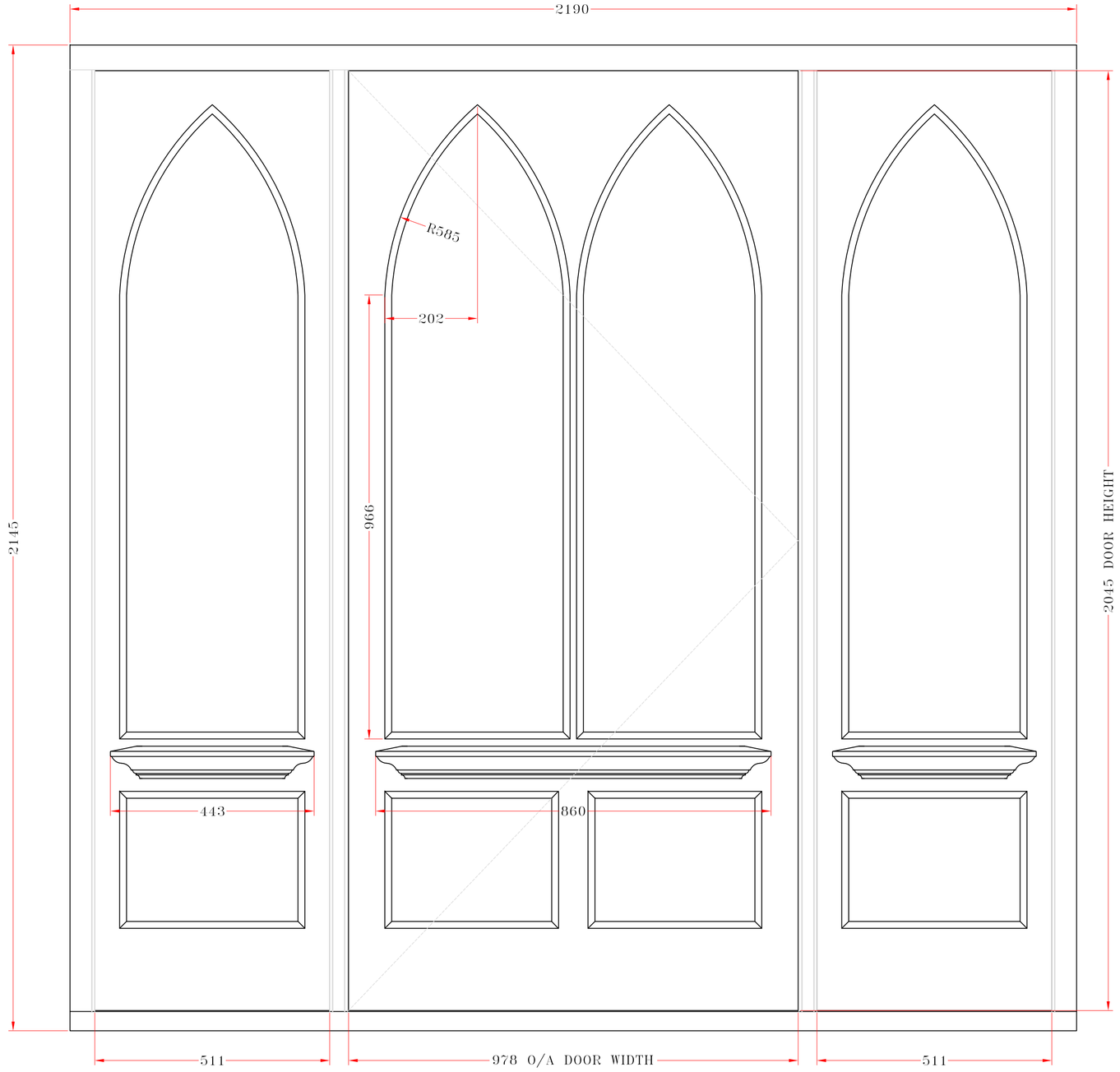

1:8 ELEVATION – INTERNALLY VIEWED

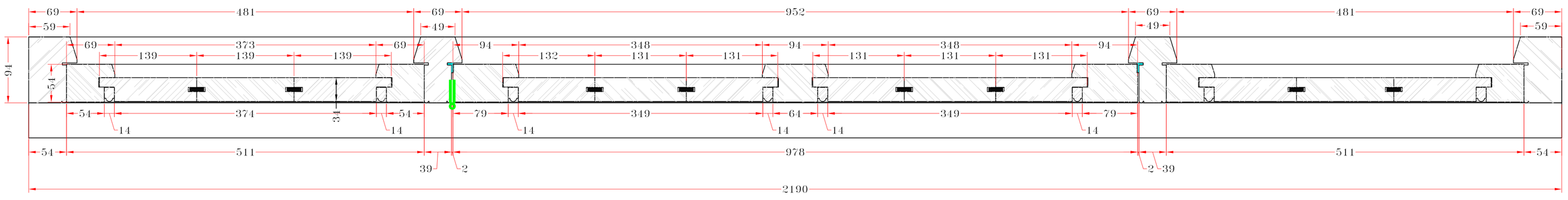

1:4 WIDTH PLAN THRU LOWER PANELS

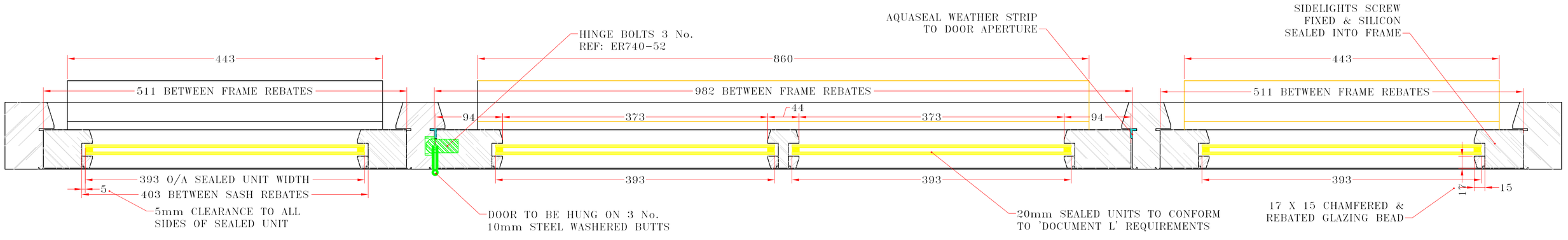

1:4 WIDTH PLAN THRU UPPER GLAZED PANELS

ISSUE. DRAFT ISSUE		
NOTES.		
E		
D		
C		
B		
A		
REV.	**DATE.**	**DESCRIPTION.**

DRAWN BY. CDB	**SCALE.**
CUSTOMER. GOTHIC HOUSE	**DATE.**
DESCRIPTION. EXTERNAL ALTERATIONS PROPOSED GOTHIC DOORS	
FINISH. SAPELE FOR PAINT	
DRWG No. GH/001	**REV.**