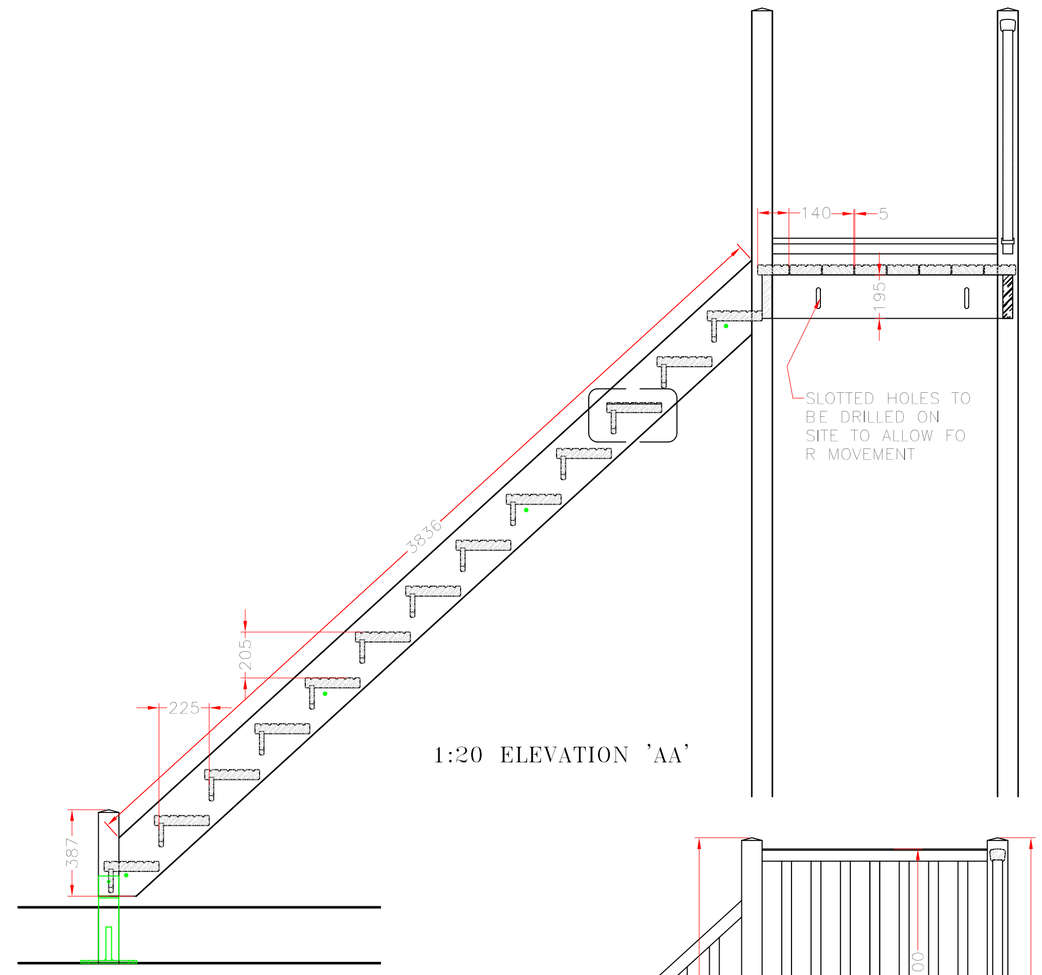

1:20 ELEVATION 'AA'

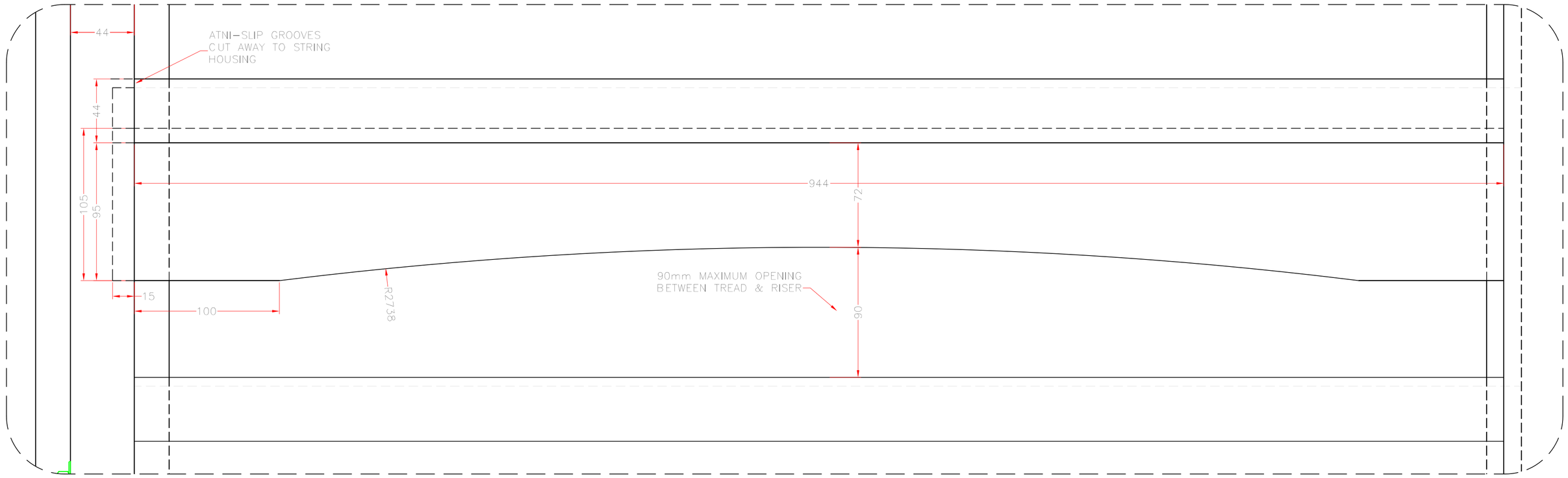

1:2 ELEVATION OF TREAD

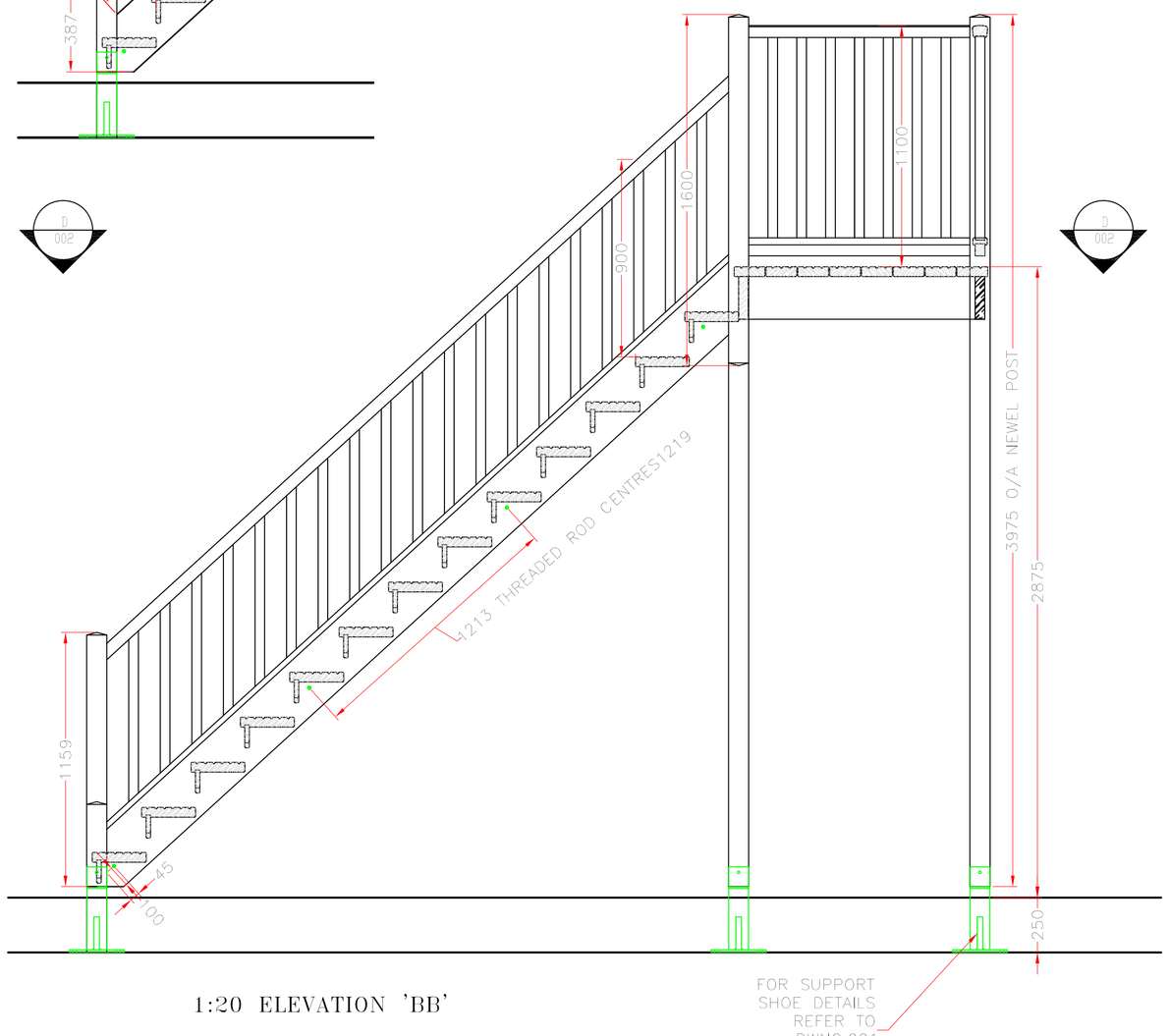

1:20 ELEVATION 'BB'

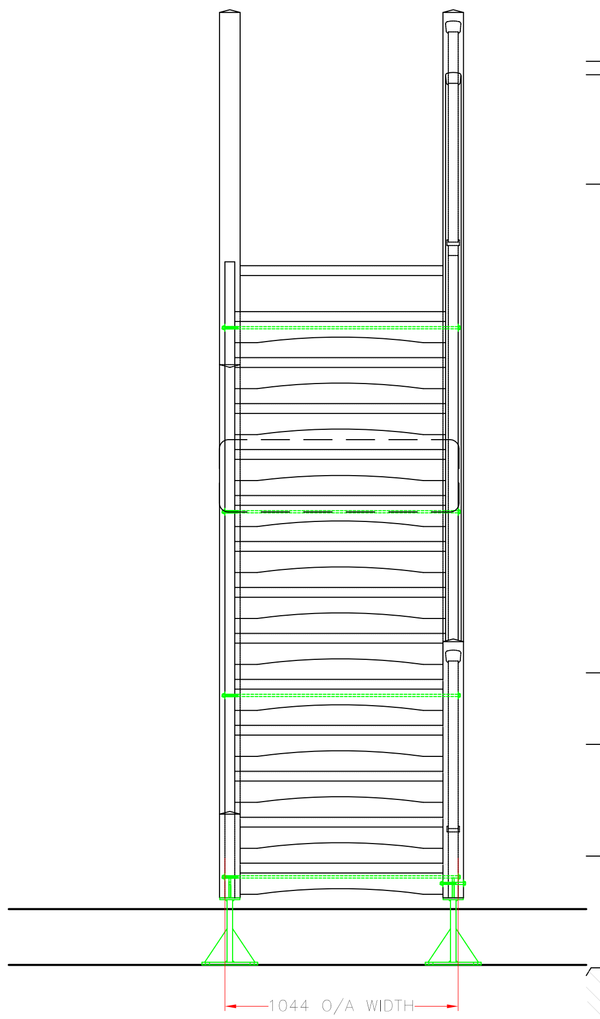

1:20 ELEVATION 'CC'

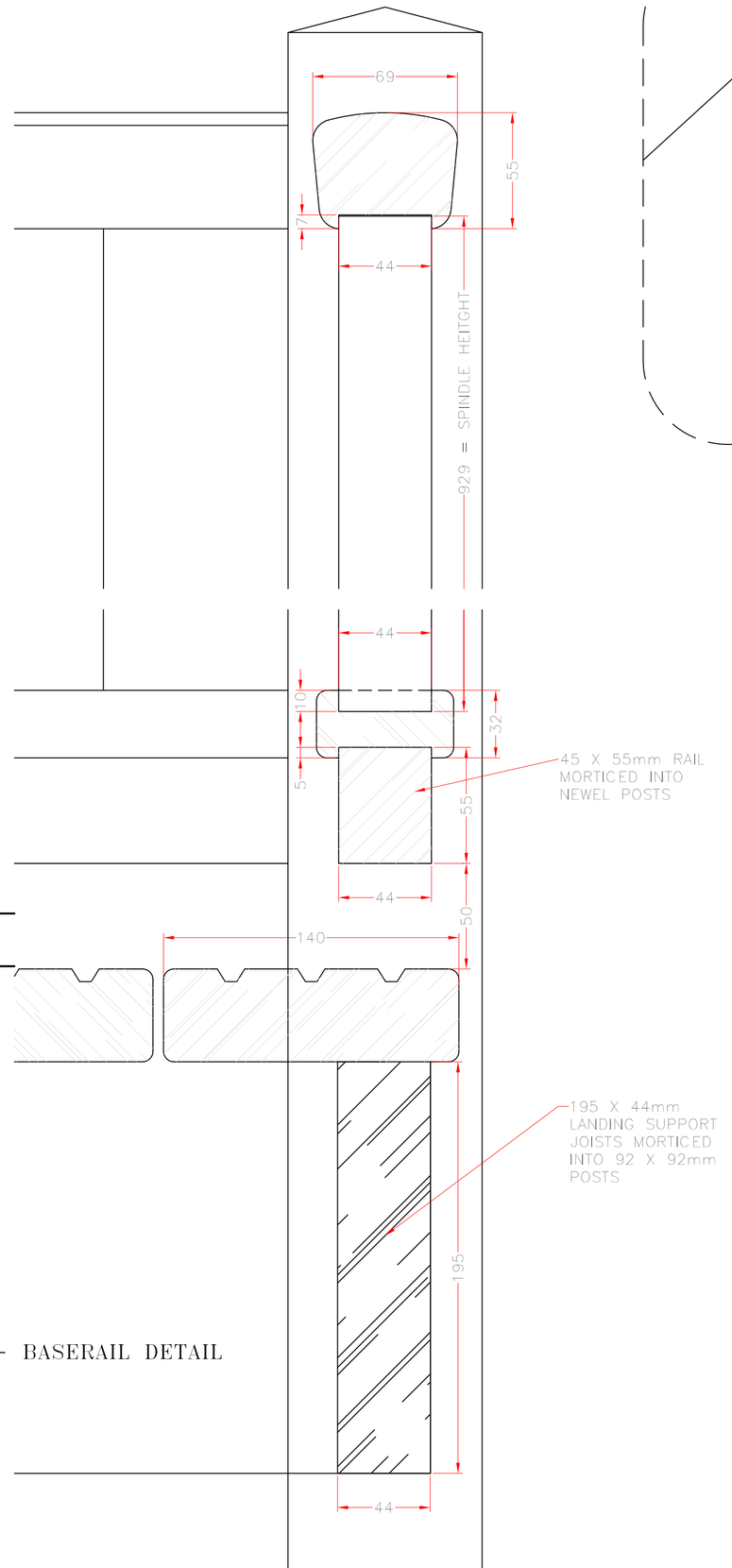

1:2 HANDRAIL – BASERAIL DETAIL

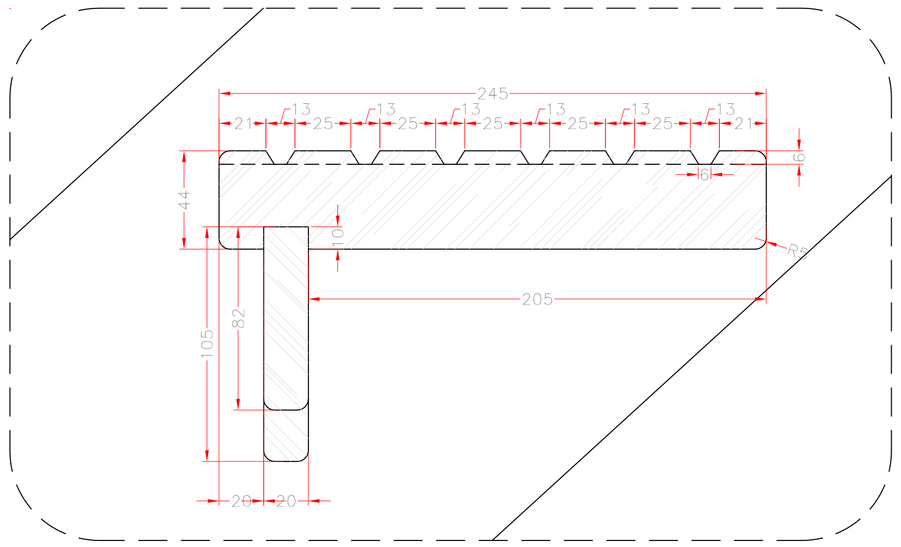

1:2 SECTION THRU TREAD

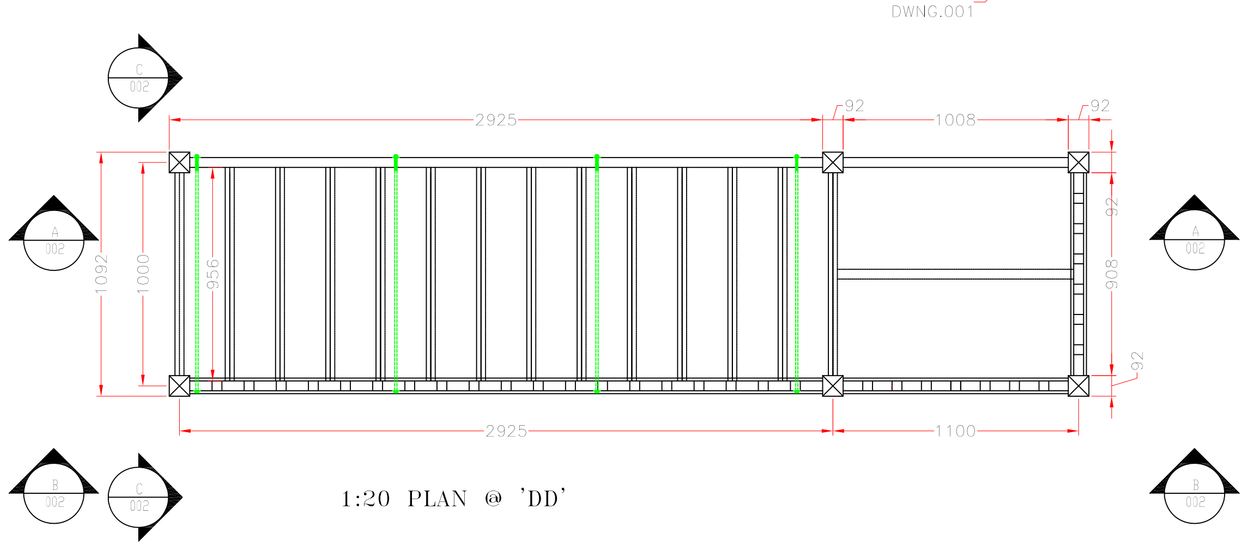

1:20 PLAN @ 'DD'

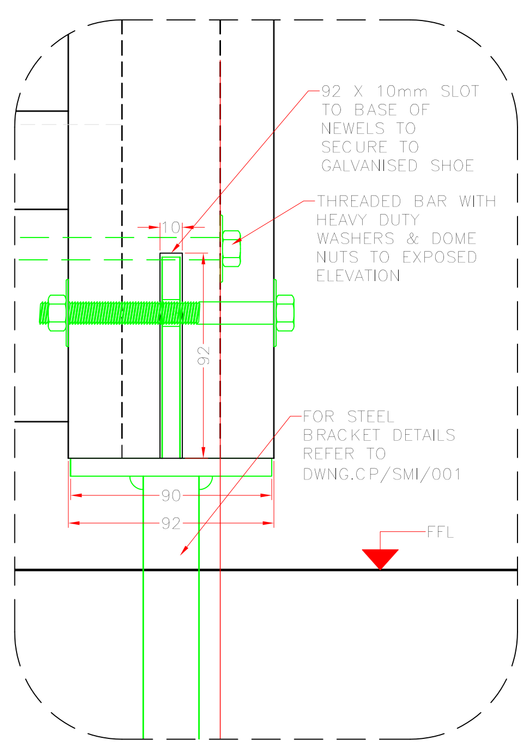

1:2 DETAIL @ NEWEL BASE

ISSUE. ISSUED FOR CONSTRUCTION		
NOTES.		
E		
D		
C		
B		
A		
REV.	**DATE.**	**DESCRIPTION.**
DRAWN BY. CDB	**SCALE.** 1:20–2 @ A1	
CUSTOMER. COUNTRYSIDE PROPERTIES	**DATE.**	
DESCRIPTION. ST. MARY'S ISLAND EXTERNAL STAIRCASES		
FINISH. IROKO		
DRWG No. CP–SMI–002	**REV.**	